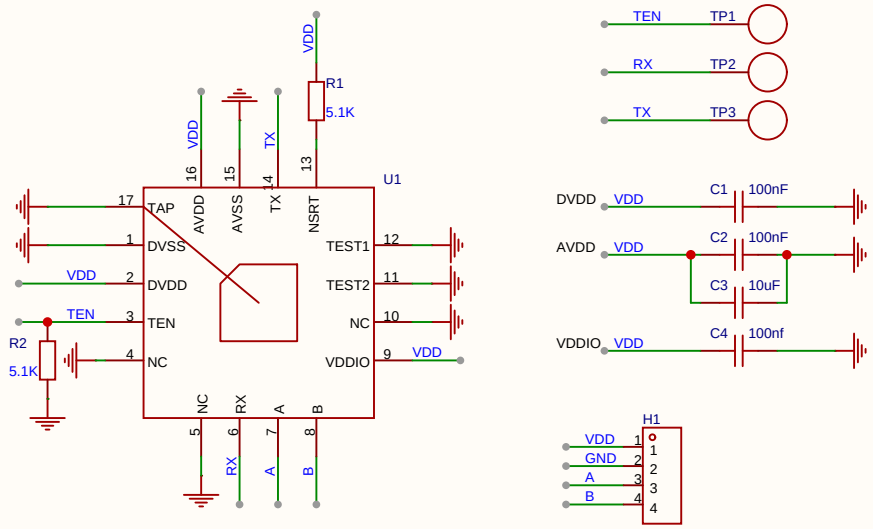
VDD
R1
5.1K
VDD
AVDD
AVSS
TX
NSRT
U1
17
TAP
1
DVSS
VDD
2
DVDD
TEN
3
TEN
R2
5.1K
4
NC
TEST1
12
TEST2
11
NC
10
VDDIO
9
VDD
NC
RX
A
B
5
6
7
8
RX
A
B
TEN
TP1
RX
TP2
TX
TP3
DVDD
VDD
C1
100nF
AVDD
VDD
C2
100nF
C3
10uF
VDDIO
VDD
C4
100nf
H1
VDD
GND
A
B
1
2
3
4